CUSTOM RECTANGULAR E-CURB

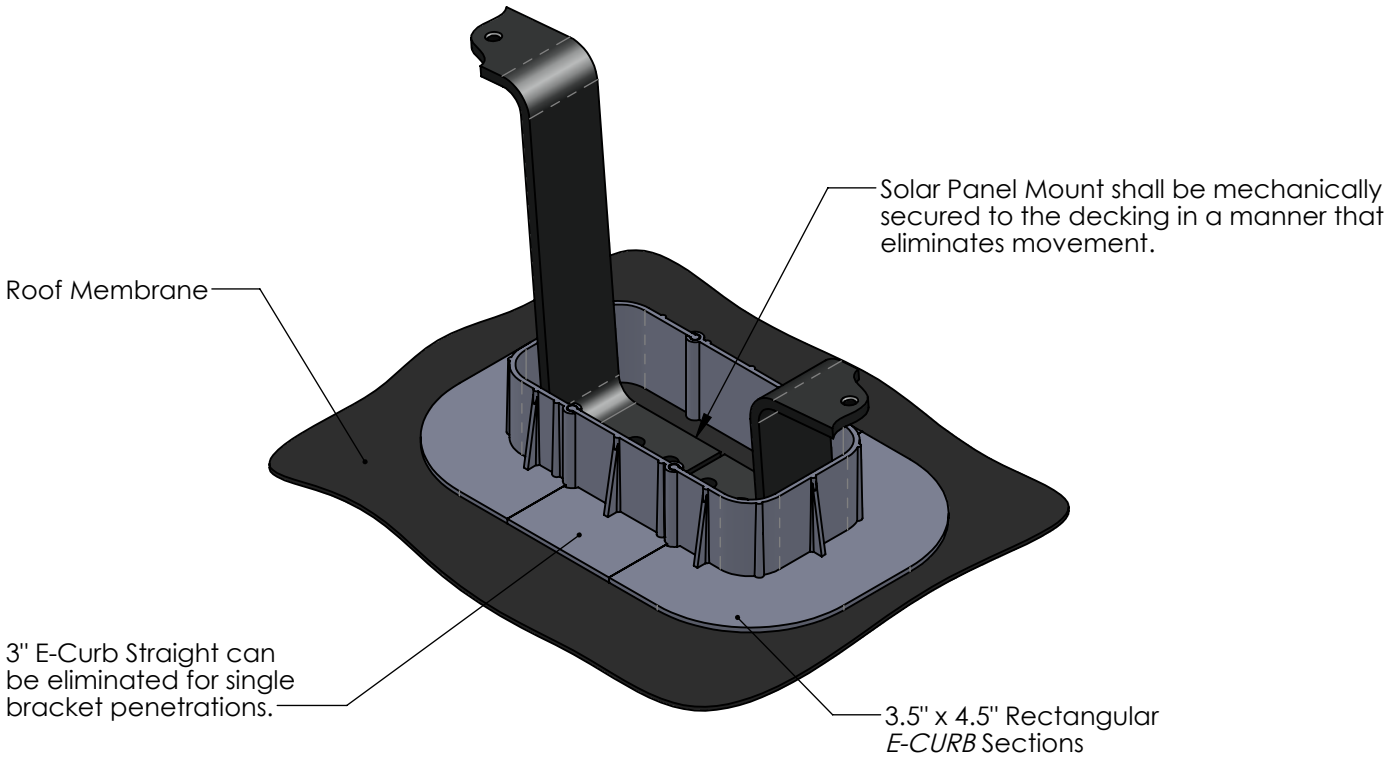

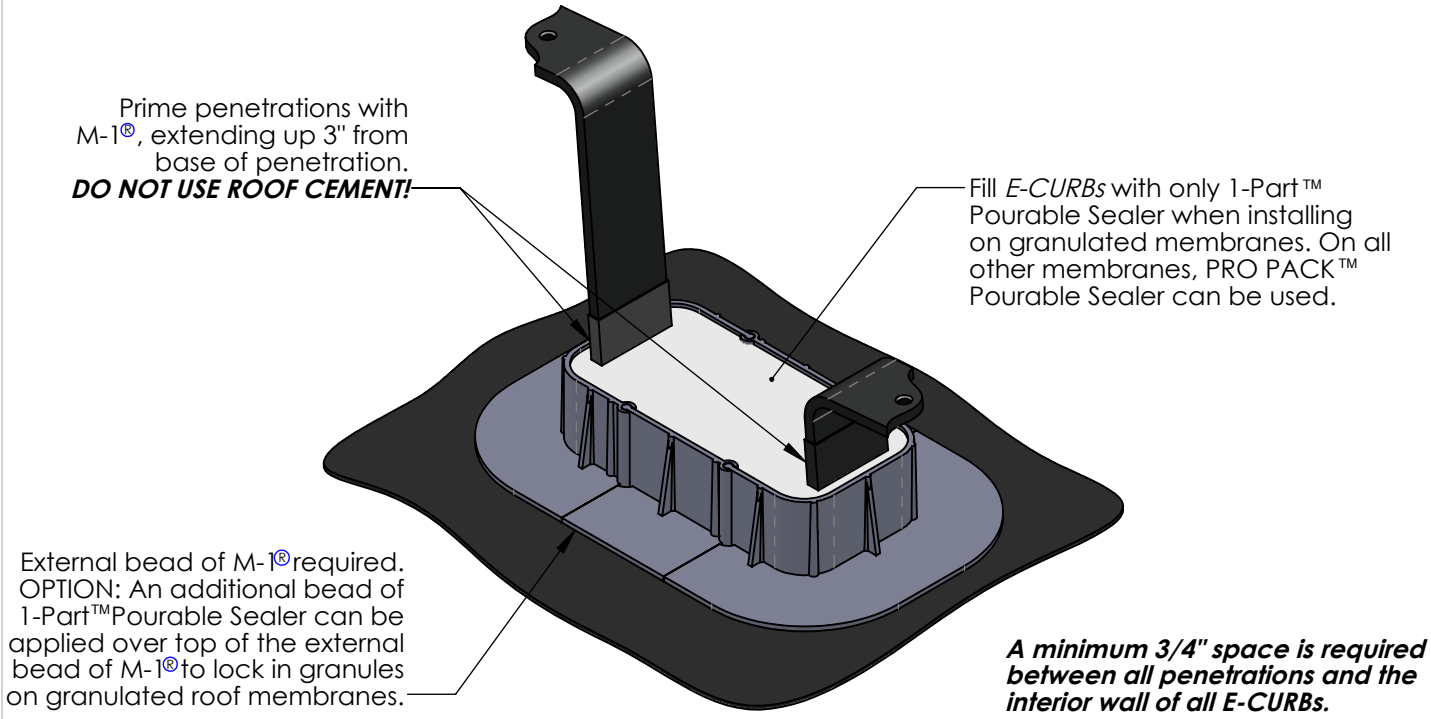

A minimum 3/4" space is required between all penetrations and the interior wall of all E-CURBs.

CHEM LINK POLYMER INNOVATION

CONTACT INFORMATION:

Customer Service: 800.826.1681
www.ChemLink.com

Date:	Title:	Sheet:	DRW:	Drawn By:
May 29, 2014	E-CURBs	1 of 1	CL-EC-01	M. Rochholz